Fisher&Paykel appliances

customercare™

Fisher&Paykel

Parts Manual

DishDrawer®

DD60DDFX7 FP AA

Product Code: 80772-A

AA

3 FRONT PANELS/CONTROLS

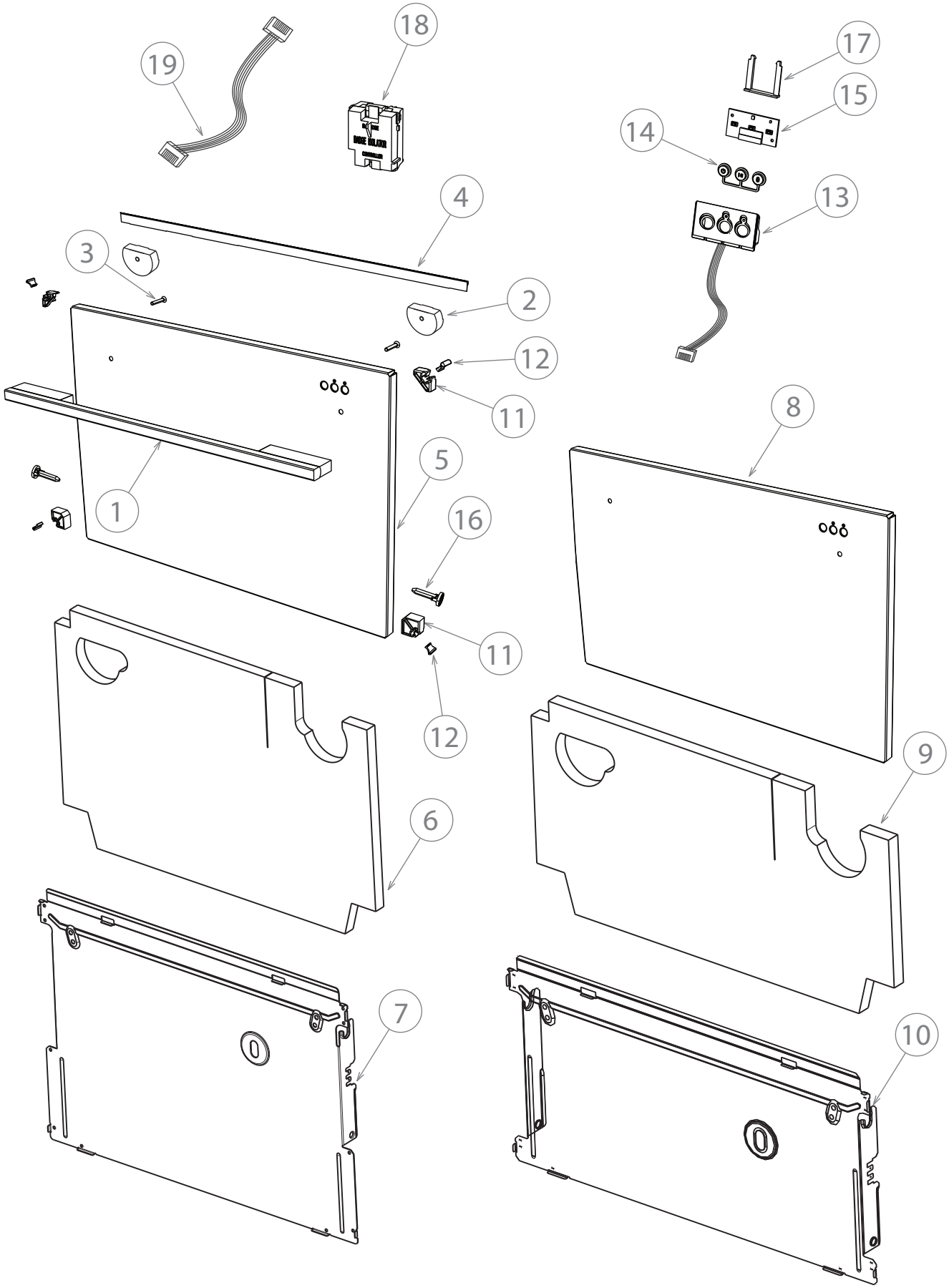

DWG 002588

5 CABINET ASSEMBLY

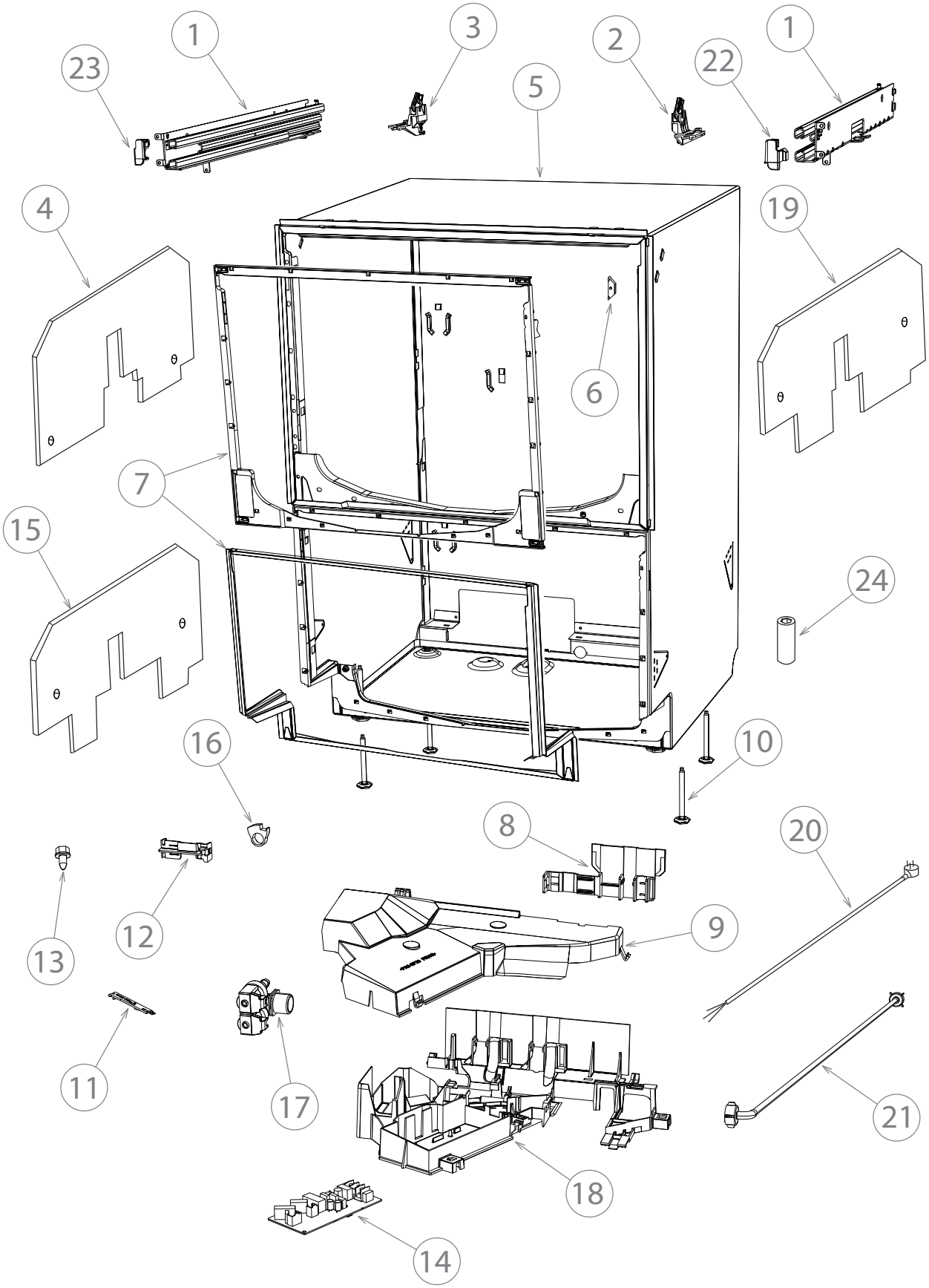

DWG 002576

9 LID & LINK ASSEMBLY

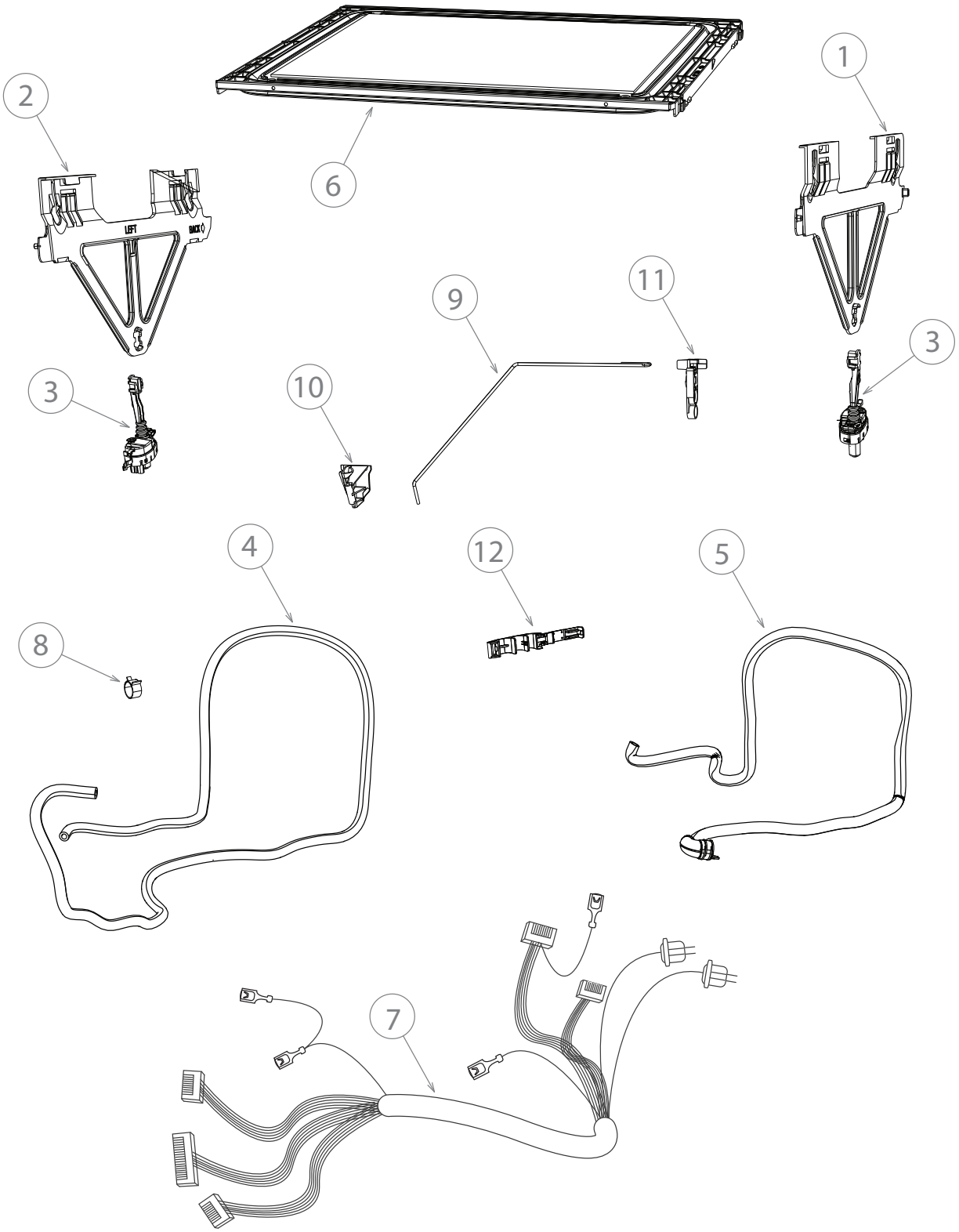

DWG 002585

11 TUB & COMPONENTS

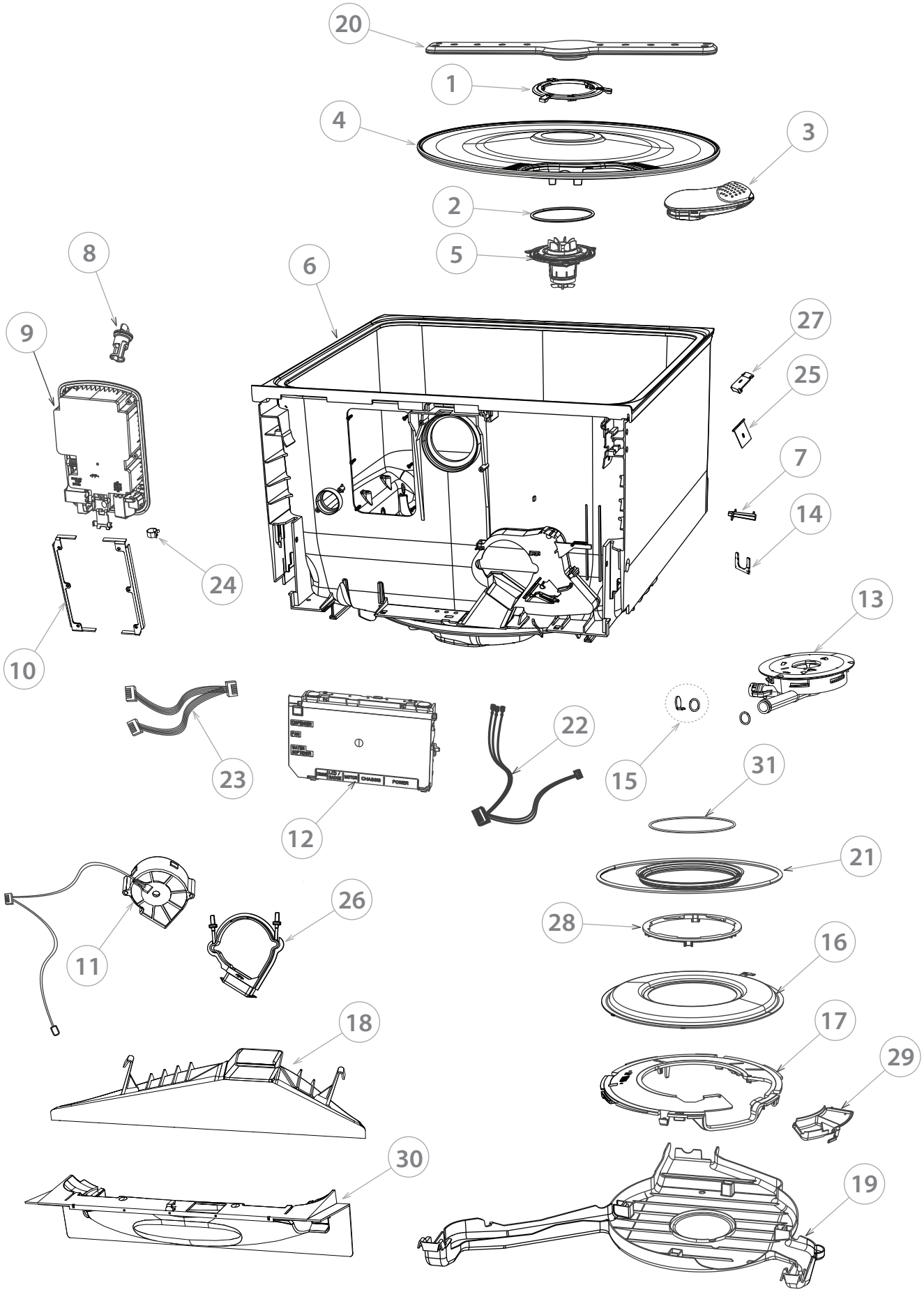

DWG 002575

BASKET & RACKS

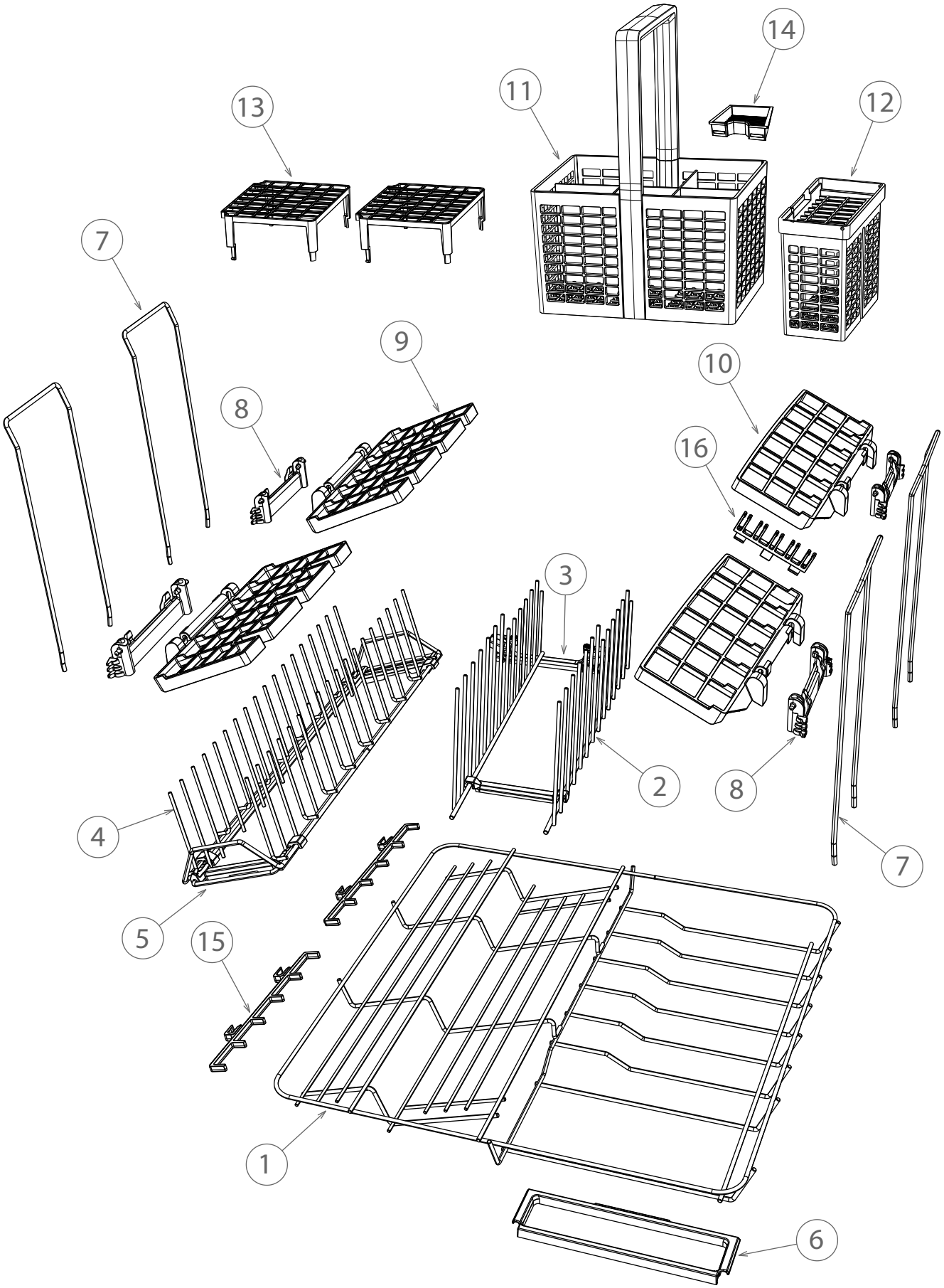

DWG 002566

INSTALLATION COMPONENTS

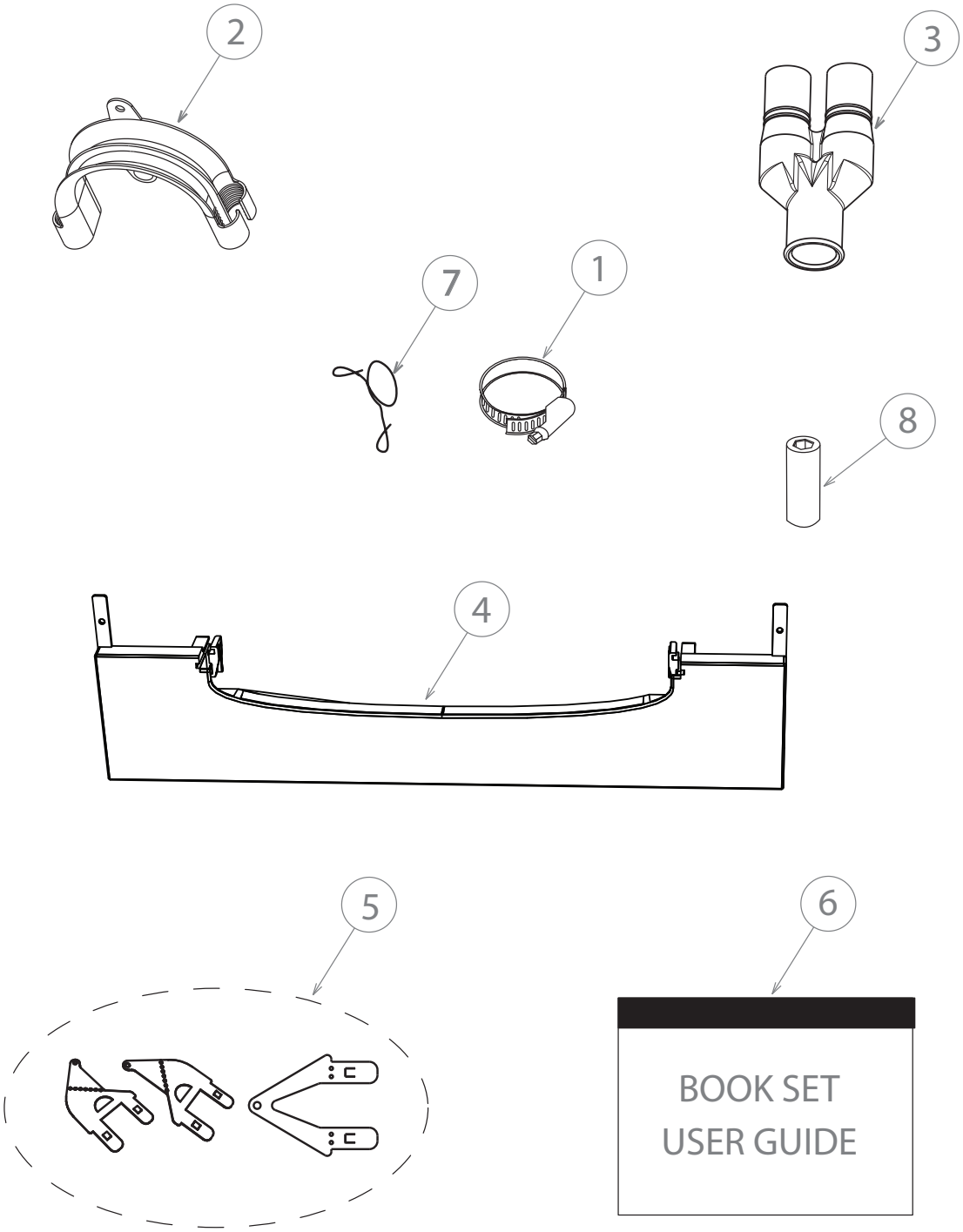

DWG 002604